REMOTE VERTICAL SEMI VERTICAL

DISASSEMBLY MANUAL

N°DOC. DM000156
REV. "A" - 24/02/23

IT
FR
EN
DE
ES
PT

INDEX

1. Introduction **3**
1.1 Scope 3
1.2 General safety information 3
1.3 Reasons for a correct disassembly 3
2. Procedure **4**

SYMBOLS USED

Prohibition symbol: it prohibits the carrying out of specific operations.

Attention symbol: accident prevention rules for the operator.

Warning symbol: there is the possibility of damaging the cabinet and/or its components.

Note symbol: it provides useful information.

Personal protection equipment

	Safety shoes
	Protective gloves
	Safety glasses
	Safety helmet
	Safety vests

1. INTRODUCTION

1.1 Scope

The document "Disassembly manual" indicates how to disassemble EPTA's products. In this document are indicated the steps to follow to disassemble horizontal cabinets.

It also contains information how to protect the safety of the persons in charge of disassembling. Instructions for use are also available on: www.costan.com.

1.2 General safety information

⚠ Do never interrupt the cooling chain of displayed goods.

⚠ Before starting the disassembly procedure, disconnect the equipment from the electrical power supply and secure against re-connecting by unauthorized persons.

⚠ Ensure that the working area is sufficiently illuminated during disassembly activity and use an additional lighting source if necessary.

⚠ Beware of touching any part of the cabinet without DPI.

1.3 Reasons for a correct disassembly

In order to guarantee the correct disposal of the materials that make up the cabinet, it is important to proceed with a correct disassembly.

Correct disassembly thus allows us to increase the percentage of recyclability.

Note: the materials must be disposed of in accordance with the law or disposal regulation in force.

IT

FR

EN

DE

ES

PT

2. PROCEDURE

1) Secure the cabinet, disconnecting the power.

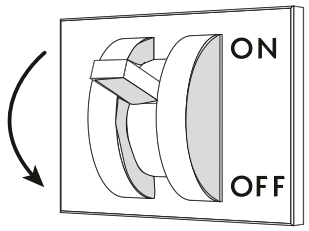

Fig. 1

2) Position of the electrical panels.

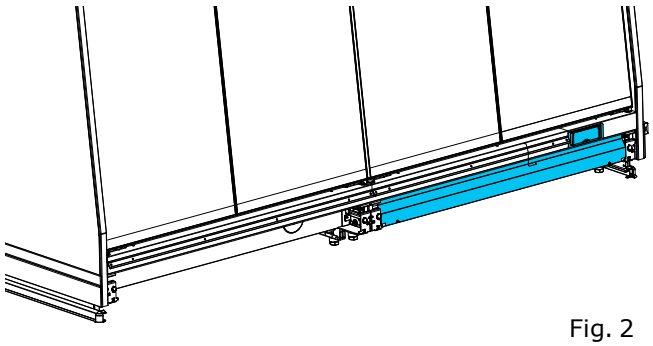

Fig. 2

3) Check the serial plate if the cabinet is plug-in or remote.

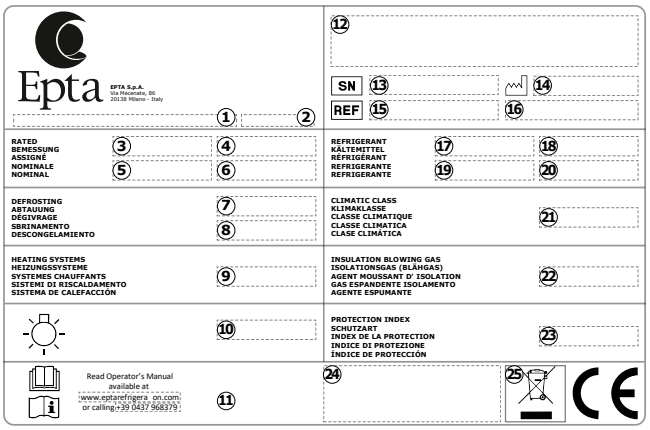

Fig. 3

4) Unscrew the bottom panels.

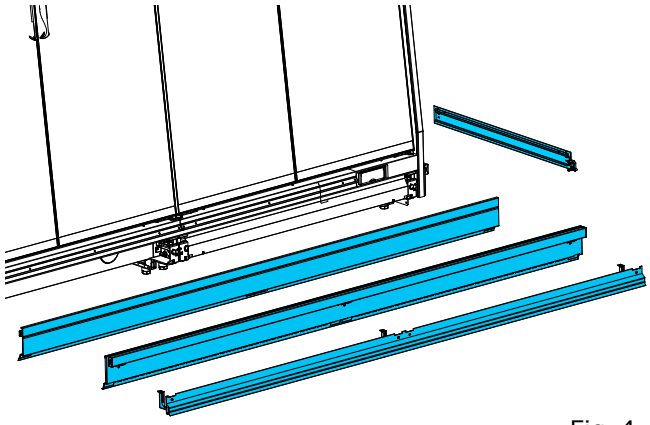

Fig. 4

5) Unscrew the endwalls and remove them.

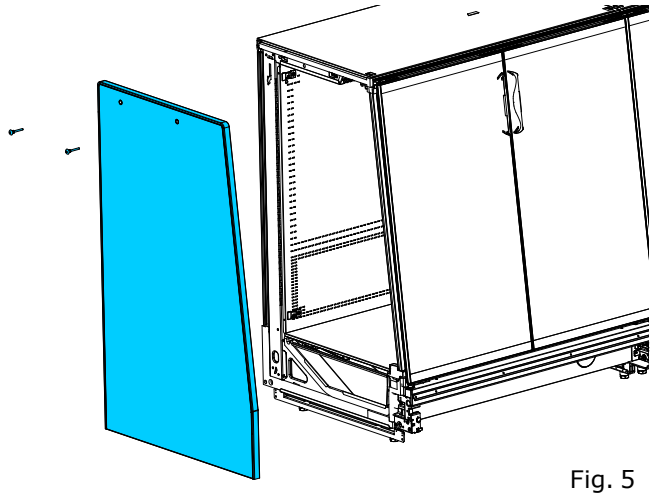

Fig. 5

6) Unscrew the bracket and remove it.

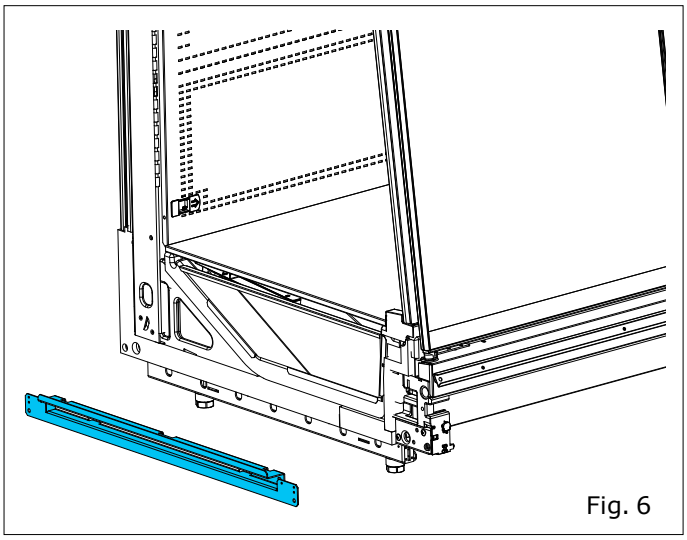

Fig. 6

7) Remove the upper panels by unscrewing the screws.

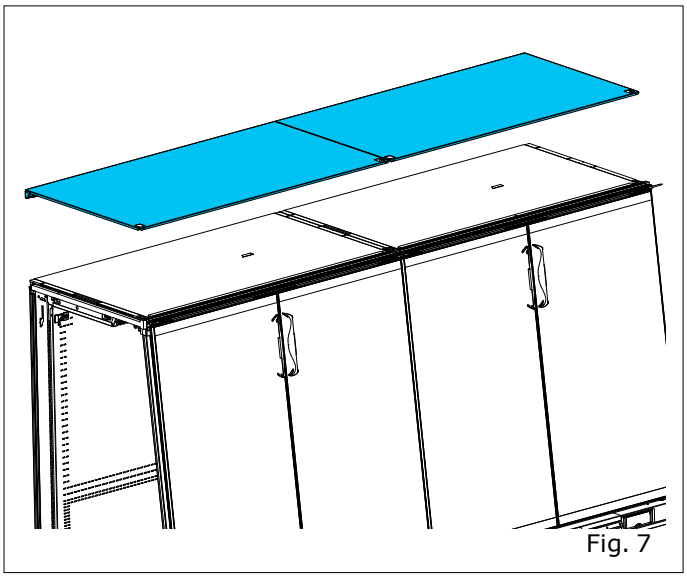

Fig. 7

8) Undo the screws holding the doors and remove them one by one.

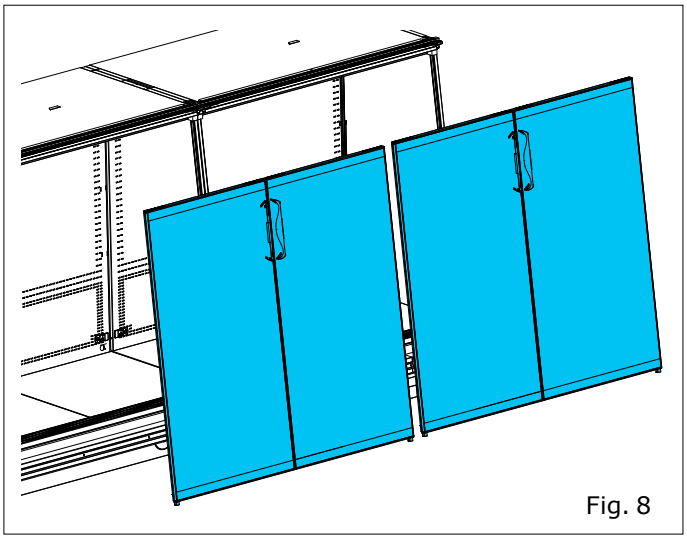

Fig. 8

9) Unscrew the screws holding the front panels. Remove the front panels.

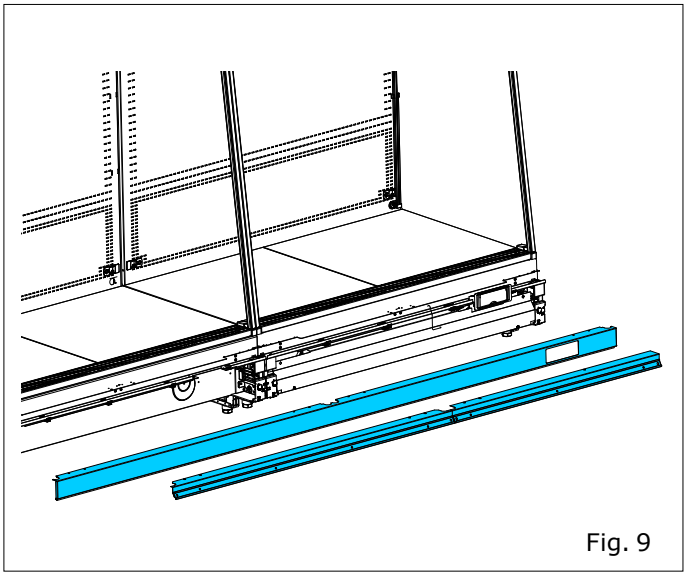

Fig. 9

Dissasembly manual

IT
FR
EN
DE
ES
PT

10) Unscrew the front panel screws. Remove the front panel that contains the display.

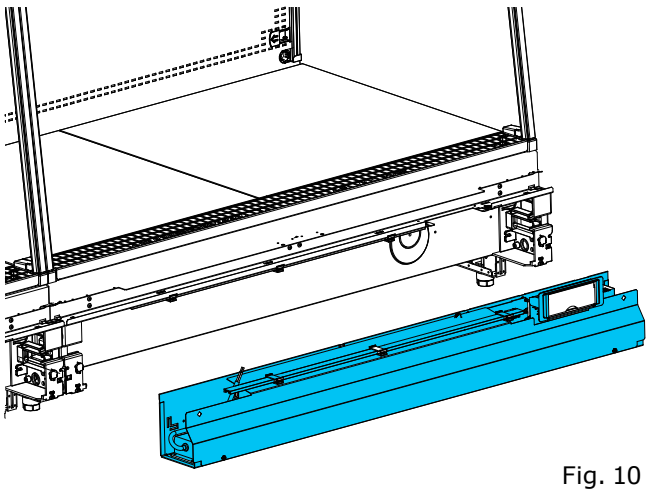

Fig. 10

11) Remove the grates.

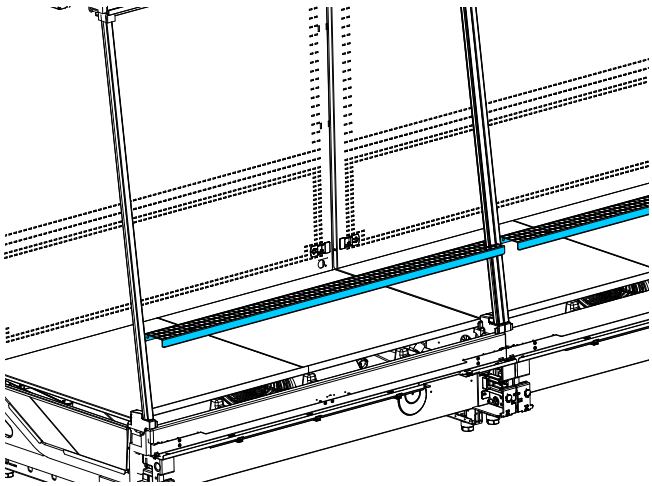

Fig. 11

12) Remove the bottom panels.

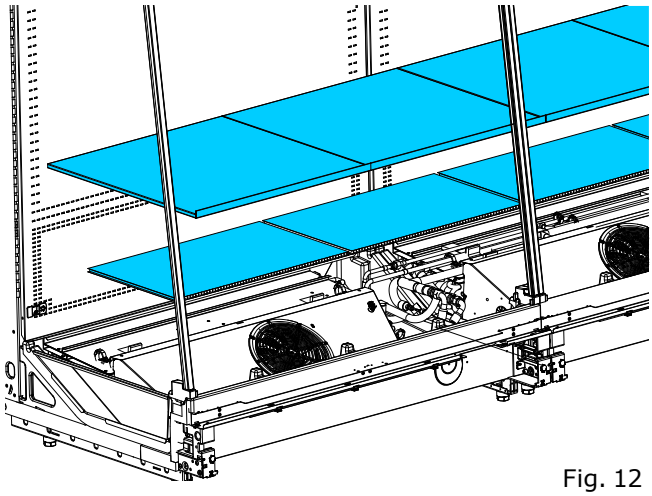

Fig. 12

13) Remove the back panel.

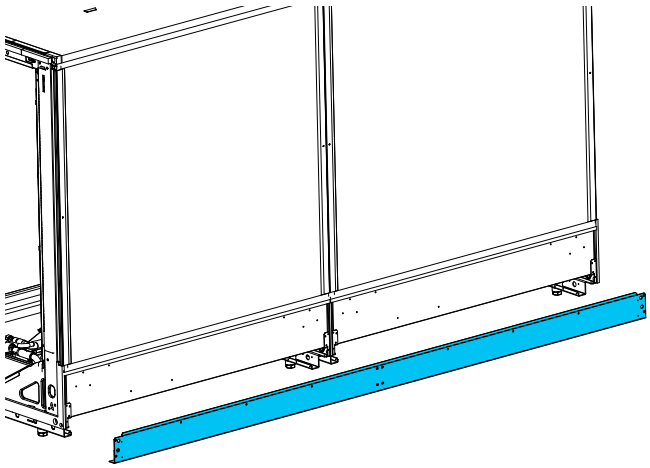

Fig. 13

14) Unhook the hooks that hold the rear panels. Remove the back panels.

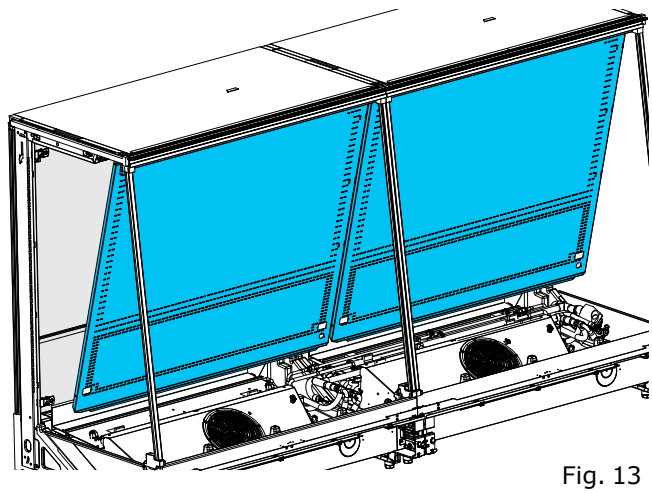

Fig. 13

15) Remove the bulbs and bulb holders.

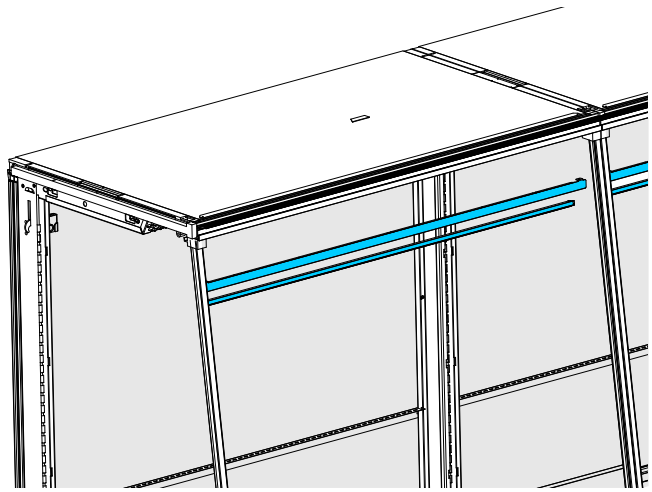

Fig. 14

16) Remove the fan holders and brackets.

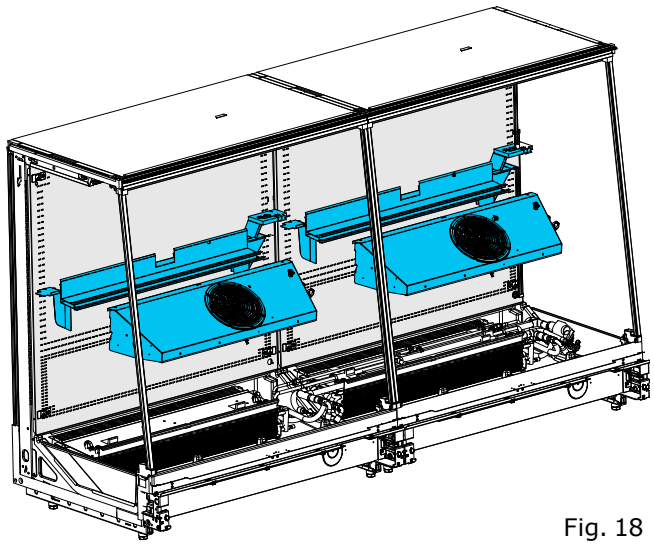

Fig. 18

17) Remove the evaporator.

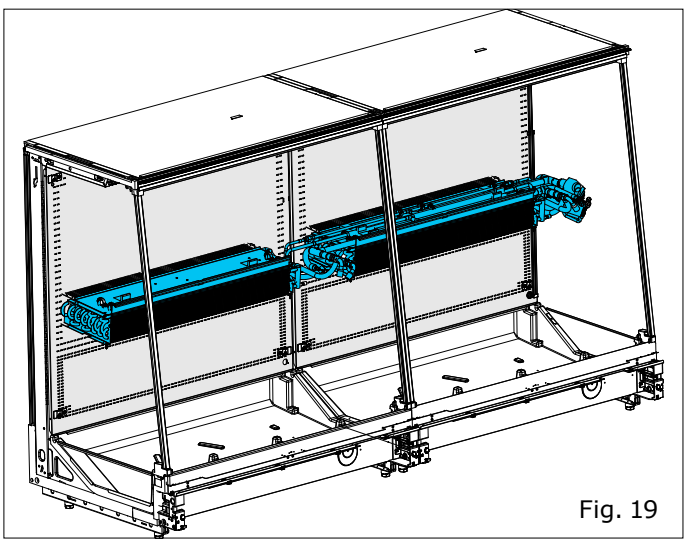

Fig. 19

COSTAN
eptarefrigeration

www.costan.com

Epta
Advanced Solutions
for your Store

EUROVENT CERTIFIED PERFORMANCE
www.eurovent-certification.com

Epta S.p.A. participates in the ECC programme for:
Refrigerated display cabinets (RDC); Check ongoing validity
of certificate online: www.eurovent-certification.com

TÜV AUSTRIA CERTIFIED
EN ISO 9001
20 100 52000877
EN ISO 14001
20 104 141373322
OHSAS 18001
20 118 141373323

CE